GALENERGOBUDPROM

Catalog of products

Our advantages

- On the ukrainian market since 1963.
- Project power in a year presents the collapsible reinforced concrete 60000 meters of cube and 8000 tone of metalware.
- Basic products: the conical reinforced concrete poles СК 22, СК 26 and cylindrical poles СЦ 20 for supports of overhead power lines with the voltage of 35-750 kV, reinforced concrete poles for supports of overhead power lines with the voltage of 0,38-10 кВ of СВ 95-2, СВ 105-3.6 and СВ 105-5, reinforced concrete foundations under metallic supports of power lines with the voltage of 35-750 kV, and also reinforced concrete wares for the open distributive devices of substations.
- The quality standard of products is the international standard ISO 9001:2009.
- Certificate of control system of production - EN 12843: 2004, EN 14991: 2007.
- Products are made of environmentally friendly high-quality materials.
- High professionalism of workers and management staff.
- Experience in the foreign market. Our partners are private and state companies in the Republic of Moldova, CIS countries, Europe, the Baltics.

We invite to mutually beneficial cooperation

Contents

Conical poles 4

Cylindrical poles 8

Metalware 10

Vibrated poles 16

Foundations 17

Foundation crossbars 23

Anchor slabs 24

Slabs ПРГ - 1м, УП-1 25

Slabs for laying the tracks and installation of transformers 26

Foundations for the installation of equipment transformer substation 28

Universal standpipes and piles for equipment 29

Norms of loading by railway 30

Conical reinforced concrete centrifuged poles for the support of power line with the voltage of 35-110 kV

DSTU BB.2.6-125:2010

album series 3.407.1 - 175 ed. 3

album series 3.407.1 - 151 ed. 3

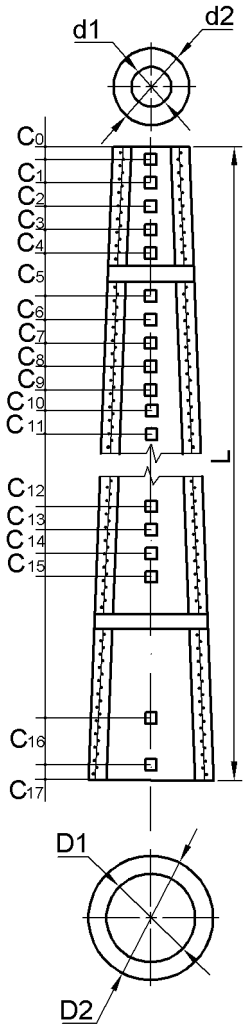

The location of the parts from which the product is made

Pole		CK22.1-1	CK22.1-2	CK22.1-3	CK22.2-1	CK22.3-1	CK22.4-1
Distance, mm	C0	100	100	100	300	200	100
	C1	1000	1000	1000	1000	2500	1000
	C2	1000	1000	1000	1000	2000	1000
	C3	1000	1000	1000	1000	2000	500
	C4	1000	1000	1000	1000	2000	500
	C5	1000	1000	1000	1000	2000	500
	C6	1000	1000	1000	1000	-	500
	C7	1000	1000	1000	2000	-	500
	C8	1000	-	1000	1000	-	1000
	C9	1000	-	1000	-	-	1000
	C10	-	-	-	-	-	1000
	C11	-	-	-	-	-	12300
	C12	-	-	-	-	-	-
	C13	-	-	-	-	-	-
	C14	-	-	-	-	-	-
	C15	-	-	-	-	-	-
	C16	3145	3145	3145	3445	3145	3145
	C17	55	55	55	55	55	55

Note. The last digit is absent in the name of the poles, because the location of the parts from which the product is manufactured for the same type of poles with different reinforced is identical.

Conical reinforced concrete centrifuged poles for the support of power line with the voltage of 35-110 kV

DSTU BB.2.6-125:2010

album series 3.407.1 - 175 ed. 3

album series 3.407.1 - 151 ed. 3

Product name (SC)	Sizes, mm					Product weight, t	Grade of concrete	Class of reinforcing steel	Consumption of materials	
	L	D1	D2	d1	d2				Concrete, m³	Steel, kg
CK 22.1-1.0	22600	540	650	330	440	5,027	B30	Ø12A600 Ø12Ат600 Ø12A800 Ø12Ат800	2,1	401,6
CK 22.1-1.1	22600	540	650	330	440	4,819	B30		2,1	368,7
CK 22.1-1.2	22600	540	650	330	440	4,765	B40		2,1	315,4
CK 22.1-2.0	22600	540	650	330	440	5,332	B30		2,1	456,7
CK 22.1-2.1	22600	540	650	330	440	4,847	B30		2,1	397,1
CK 22.1-3.0	22600	540	650	330	440	4,995	B30		2,1	369,6
CK 22.1-3.1	22600	540	650	330	440	4,809	B30		2,1	308,9
CK 22.2-1.0	22600	490	650	310	440	6,571	B40		2,3	820,5
CK 22.2-1.1	22600	490	650	310	440	6,418	B40		2,3	668,3
CK 22.3-1.1	22600	510	650	310	440	6,086	B40		2,2	585,5
CK 22.4-1.1	22600	490	650	310	440	4,833	B40		2,1	308,0
CK 22.4-2.1	22600	490	650	310	440	4,912	B40		2,1	386,5
CK 22.4-3.1	22600	490	650	310	440	5,083	B40		2,1	563,1

Conical reinforced concrete centrifuged poles for the support of power lines with the voltage of 35-220 kV

DSTU BB.2.6-125:2010

album series 3.407.1 - 175 ed. 3

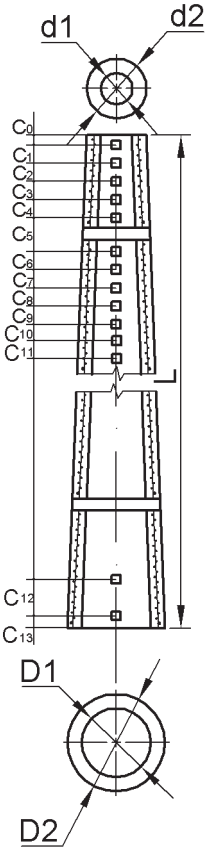

The location of the parts from which the product is made

Pole		CK26.1-1	CK26.1-2	CK26.1-3	CK26.1-4	CK26.1-5	CK26.1-6	CK26.2-1	CK26.3-1
Distance, mm	C0	200	200	200	200	200	200	200	200
	C1	1000	1000	1000	1000	1500	1000	1000	1000
	C2	1000	2000	2000	3000	1000	1000	1000	1000
	C3	1000	2000	500	1000	1000	1000	1500	1000
	C4	1000	1500	500	3000	1000	1000	1000	1000
	C5	1000	1500	1000	-	2000	1000	14800	1000
	C6	1000	-	1000	-	1500	1000	1500	1000
	C7	1000	-	1000	-	-	500 x 2	-	1000
	C8	1000	-	-	-	-	1000 x 2	-	1000
	C9	1000	11300	-	-	-	10300	-	1000
	C10	-	-	-	-	-	-	-	1000
	C11	-	-	-	-	-	-	-	1000
	C12	3445	3445	3445	3500	3445	3445	3445	3500
	C13	55	55	55	0	55	55	55	0

Note. The last digit is absent in the name of the poles, because the location of the parts from which the product is manufactured for the same type of poles with different reinforced is identical.

Conical reinforced concrete centrifuged poles for the support of power lines with the voltage of 35-220 kV

DSTU BB.2.6-125:2010

album series 3.407.1 - 175 ed. 3

Product name (SC)	Sizes, mm					Product weight, t	Grade of concrete	Class of reinforcing steel	Consumption of materials	
	L	D1	D2	d1	d2				Concrete, m³	Steel, kg
CK 26.1-1.0	26000	500	650	300	410	6,896	B40	Ø12A600 Ø12Ат600 Ø12A800 Ø12Ат800	2,5	645,50
CK 26.1-1.1	26000	500	650	300	410	6,821	B40		2,5	571,10
CK 26.1-2.0	26000	500	650	300	410	6,929	B40		2,5	679,30
CK 26.1-2.1	26000	500	650	300	410	6,849	B40		2,5	598,90
CK 26.1-3.0	26000	500	650	300	410	7,054	B40		2,5	803,90
CK 26.1-3.1	26000	500	650	300	410	6,992	B40		2,5	742,10
CK 26.1-4.1	26000	500	650	300	410	6,860	B40		2,5	609,70
CK 26.1-5.1	26000	500	650	300	410	6,997	B40		2,5	747,00
CK 26.1-5.1a	26000	500	650	300	410	6,997	B40		2,5	747,00
CK 26.1-6.0	26000	500	650	300	410	6,984	B40		2,5	733,80
CK 26.1-6.1	26000	500	650	300	410	6,910	B40		2,5	660,30
CK 26.2-1.0	26000	504	650	280	410	7,105	B40		2,5	855,00
CK 26.2-1.1	26000	504	650	280	410	6,952	B40		2,5	702,20
CK 26.3-1.1	26000	500	650	300	410	5,936	B40		2,5	436,00
CK 26.3-2.1	26000	500	650	300	410	6,075	B40		2,5	700,40

Cylindrical reinforced concrete centrifuged poles for the support of power lines with the voltage of 750 kV (SC)

DSTU BB.2.6-126:2010

album series 3.407.1 - 151 ed. 3

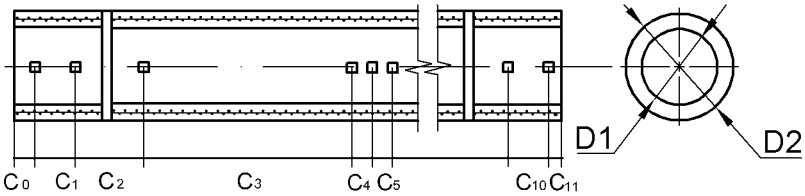

The location of the parts from which the product is made							
Pole		СЦ20.1-1	СЦ20.1-2	СЦ20.2-1	СЦ20.2-2	СЦ20.2-3	СЦ20.2-4
Distance, mm	C_0	200	200	300	300	300	200
	C_1	800	800	1500	2200	1500	800
	C_2	1500	1500	1500	500	1500	1500
	C_3	1500	1500	1500	1500	1500	1500
	C_4	1500	1500	1500	500 x 2	1500	1500
	C_5	1000	1000	-	1000	9000	8800
	C_6	-	8800	-	-	-	-
	C_7	-	-	-	-	-	-
	C_8	-	-	-	-	-	-
	C_9	-	-	-	-	-	-
	C_{10}	4145	4145	4145	4145	4145	4145
	C_{11}	55	55	55	55	55	55

Note. The last digit is absent in the name of the poles, because the location of the parts from which the product is manufactured for the same type of poles with different reinforced is identical.

Cylindrical reinforced concrete centrifuged poles for the support of power lines with the voltage of 750 kV (SC)

DSTU BB.2.6-126:2010

album series 3.407.1 - 151 ed. 3

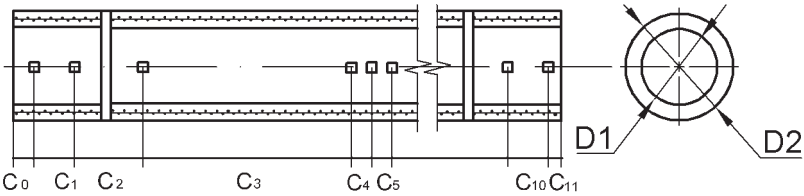

Product name (SC)	Sizes, mm			Product weight, t	Grade of concrete	Class of reinforcing steel	Consumption of materials	
	L	D1	D2				Concrete, m³	Steel, kg
СЦ 20.1-1.1	20000	690 (640)	800	8,538	B45	Ø12A800, Ø12Aт800	3,06	888,0
СЦ 20.1-2.1	20000	690 (640)	800	8,492	B45		3,06	841,7
СЦ 20.2-1.0	20000	630	800	10,280	B45	Ø14A800, Ø14Aт800	3,65	1150,9
СЦ 20.2-1.1	20000	630	800	10,160	B45		3,65	1030,0
СЦ 20.2-2.1	20000	690 (640)	800	10,160	B45		3,65	1192,9
СЦ 20.2-3.1	20000	690 (640)	800	10,140	B45		3,65	1017,8
СЦ 20.2-4.1	20000	690 (640)	800	10,150	B45		3,65	1022,0

Metalware

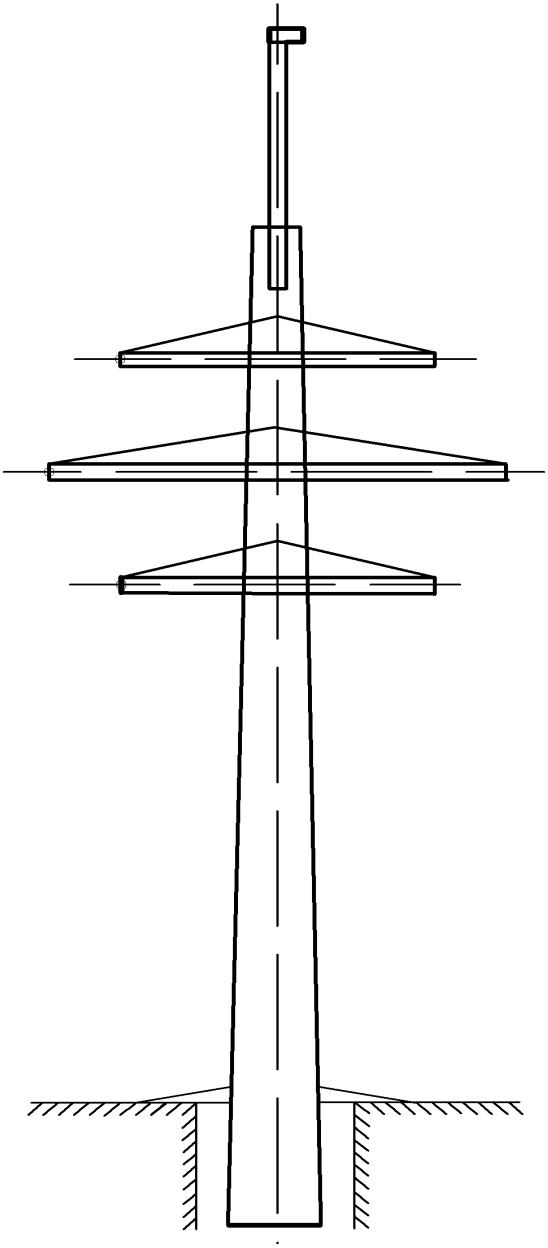

Metalware

Grade of metalware	Grade of poles	Number of poles on the support	Technical documentation
High-voltage power lines with the voltage of 35 kV			
КБ 35-1.1*	СК 22.2-1.0	1	album series 3.407.1-164 (working prodject 2016-03.KS)
	СК 22.2-1.1		
ПБ 35-1.1*	СК 22.1-1.0	1	
ПБ 35-2.1*	СК 22.1-1.1	1	
ПБ 35-3.1*	СК 22.1-2.0	1	
	СК 22.1-2.1		
ПБ 35-4.1*	СК 22.1-1.0	1	
	СК 22.1-1.1		
ПБГ 35-1.1*	СК 22.1-2.0	1	
	СК 22.1-2.1		
ПУСБ 35-1.1*	СК 22.1-1.0	1	
	СК 22.1-1.1		
	СК 22.1-2.0		
	СК 22.1-2.1		
ПУСБ 35-2.1*	СК 22.1-1.0	2	
	СК 22.1-1.1		
ПУСБ 35-4.1*	СК 22.1-2.0	2	
	СК 22.1-2.1		
УБ 35-1*	СК 22.2-1.0	1	drawing 9561 tm-t1
	СК 22.2-1.1		
УБ 35-11-1*	СК 22.2-1.0	1	album series 3.407.1-164 (working prodject 2016-03.KS)
	СК 22.2-1.1		
УБ 35-110-5*	СК 22.2-1.0	2	
	СК 22.2-1.1		
УБ 35-110-11 (о)*	СК 22.2-1.0	1	
	СК 22.2-1.1		
УБ 35-110-11 (к)*	СК 22.2-1.0	1	
	СК 22.2-1.1		

Metalware

**заміна траверс з кутника на траверси зі швелера (ТШ1-ТШ7, ТШ9).*

заміна траверс болтового з'єднання на траверси зварного з'єднання

Grade of metalware	Grade of poles	Number of poles on the support	Technical documentation
High-voltage power lines with the voltage of 110 kV			
ПБ 110-1*	СК 22.4-1.0	1	drawing 9561 tm-t1 (working prodject 2016-03.KS)
	СК 22.4-1.1		
ПБ 110-2*	СК 22.1-1.0	1	
	СК 22.1-1.1		
	СК 22.1-2.0		
	СК 22.1-2.1		
ПБ 110-3*	СК 22.1-2.0	1	
	СК 22.1-2.1		
ПБ 110-4*	СК 26.1-2.0	1	
	СК 26.1-2.1		
ПБ 110-5*	СК 22.1-2.0	1	
	СК 22.1-2.1		
ПБ 110-6*	СК 22.4-1.0	1	
	СК 22.4-1.1		
ПБ 110-8*	СК 26.1-1.0	1	
	СК 26.1-1.1		
	СК 26.1-6.0		
	СК 26.1-6.1		
ПБ 110-10*	СК 26.1-3.0	1	
	СК 26.1-3.1		
ПБ 110-11*	СК 22.1-1.0	1	album series 3.407-131
	СК 22.1-1.1		
	СК 22.1-3.0		
	СК 22.1-3.1		
ПБ 110-12*	СК 22.1-2.0	1	
	СК 22.1-2.1		
ПБ 110-13*	СК 22.1-2.0	1	
	СК 22.1-2.1		

Metalware

Grade of metalware	Grade of poles	Number of poles on the support	Technical documentation
High-voltage power lines with the voltage of 110 kV			
ПБ 110-15*	СК 22.1-2.0	1	album series 3.407-131
	СК 22.1-2.1		
ПБ 110-16*	СК 22.1-1.0	1	
	СК 22.1-1.1		
УБ 110-2	СЦ 20.2-1.0	1	drawing 9561 tm-t3
	СЦ 20.2-1.1		
УБ 110-4	СЦ 20.2-1.0	2	
	СЦ 20.2-1.1		
УБ 110-7	СЦ 20.2-1.0	1	album series 3.407-126, drawing 9561 tm-t3
	СЦ 20.2-1.1		
УБ 110-9	СЦ 20.2-1.0	2	
	СЦ 20.2-1.1		
УБ 110-11	СК 22.3-1.0	1	album series 3.407-131
	СК 22.3-1.1		
УБ 110-13	СК 22.2-1.0	2	
	СК 22.2-1.1		
ПСБ 110-1*	СК 26.1-1.0	1	drawing 9561 tm-t1 (working prodject 2016-03.KS)
	СК 26.1-1.1		
УСБ 110-2	СЦ 20.2-1.0	1	drawing 9574 тм-т1
	СЦ 20.2-1.1		
УСБ 110-2-1	СЦ 20.1-1.1	1	
УСБ 110-4	СЦ 20.2-1.0	2	
	СЦ 20.2-1.1		

Metalware

Grade of metalware	Grade of poles	Number of poles on the support	Technical documentation
High-voltage power lines with the voltage of 110 kV			
УСБ 110-5*	СК 26.1-6.0	2	drawing 9561 tm-t1
	СК 26.1-6.1		
УСБ 110-17*	СК 22.2-1.0	2	album series 3.407-131
	СК 22.2-1.1		
УСБ 110-19	СЦ 20.2-1.0	1	drawing 9561 tm-t1
	СЦ 20.2-1.1		
УСБ 110-21	СЦ 20.2-1.0	2	
	СЦ 20.2-1.1		
УСБ 110-23	СЦ 20.2-1.0	1	album series 3.407-126
	СЦ 20.2-1.1		
High-voltage power lines with the voltage of 220 kV			
ПБ 220-1	СК 26.1-2.0	1	drawing 9561 tm-t1
	СК 26.1-2.1		
	СК 26.1-6.0		
	СК 26.1-6.1		
ПБ 220-3	СК 26.1-6.0	1	
	СК 26.1-6.1		
ПБ 220-12	СК 26.2-1.0	2	album series 3.407-131
	СК 26.2-1.1		
УБ 220-1	СК 26.1-4.0	2	drawing 9561 tm-t1
	СК 26.1-4.1		
УБ 220-7	СЦ 20.1-1.1	1	drawing 9561 tm-t3
УБ 220-9	СЦ 20.1-1.1	2	
High-voltage power lines with the voltage of 330 kV			
ПБ 330-7н	СК 26.2-1.0	2	drawing 7073 tm
	СК 26.2-1.1		

Metalware

Product name	Note	Technical documentation
Traverse from the shveler for metalware		
ТШ1 (ТШ1м) - ТШ4 (ТШ4м)	Traverse for metalware	working drawing 2016-03.KS
ТШ5 - ТШ7		
ТШ9		
Universal searchlight masts and lightning protectors		
ПМЖ-16,6	Searchlight mast	album series 3.407-108
ПМЖ-19,3		
ПМЖ-22,8		
МЖ-24,3	Lightning protectors	
МЖ-27		
МЖ-30,6		
Wind and internal connections		
Wind connections for supports П-330		drawing 5003-302-25 EPL
М-3	Internal connections	drawing 5064-376-01-Т1
В-3		drawing 1624/4-376-01-Т1
Elements fastening of crossbars		
Д-110	for Р1-А	album series 3.407-115 (ed. 5)
Д-12		
Д-13		
КР-1	for АР5	
КР-5		
КР-6	for АР6	
КР-8	for АР 6-1, АР-8	
КР-8/1	for АР-8	drawing 20/05-302-25-PLB.1

Vibrated reinforced concrete poles for overhead power lines with the voltage of 0,38 - 10 kV

drawing № 237 n/1

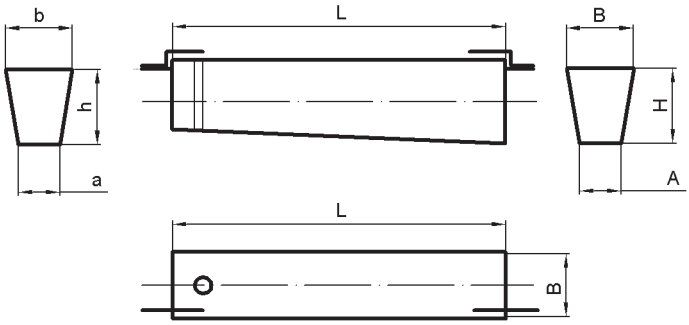

Product name (SV)	Sizes, mm							product weight, t	Grade of concrete	Class of reinforcing steel	Consumption of materials	
	L	A	B	H	a	b	h				Concrete, m³	Steel, kg
CB 95-1	9500	150	175	245	150	175	150	0,750	B30	Φ10 A600	0,30	28,5
CB 95-2.02	9500	150	175	245	150	175	150	0,750	B30	Φ10 A800	0,30	31,7
CB 105-3,6.0.1	10500	175	205	280	175	205	190	1,180	B30	Φ14 A800	0,47	57,7
CB 105-3,6.0.3	10500	175	205	280	175	205	190	1,180	B30	Φ12 A800	0,47	58,7
CB 105-3,6.0.5	10500	175	205	280	175	205	190	1,180	B30	Φ10 A800	0,47	49,7
CB 105-3,6.0.6	10500	175	205	280	175	205	190	1,180	B30	Φ10 A800	0,47	53,2
CB 105-5.01	10500	175	205	280	175	205	190	1,180	B30	Φ14 A800	0,47	74,7

Foundations under intermediate unified metal poles for the power lines with the voltage of 35-330 kV

album series 3.407-115 ed. 2

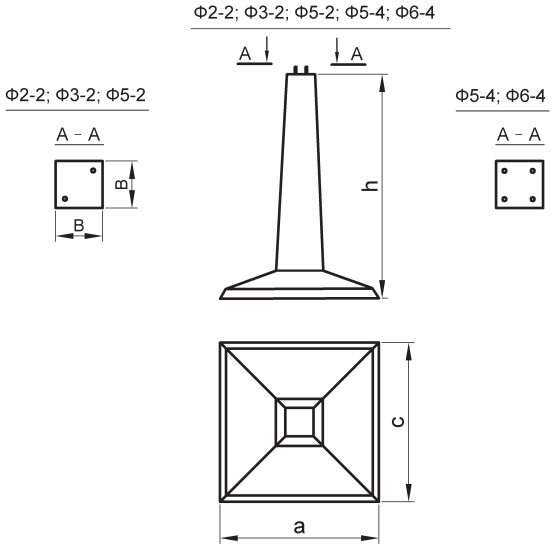

Product name (F)	Sizes, mm				Product weight, t	Grade of concrete	Consumption of materials	
	a	c	b	h			Concrete, m³	Steel, kg
Ф2-2	1500	1500	400	2700	2,40	B30	0,96	102,0
Ф3-2	1800	1800	400	2700	2,90	B30	1,17	133,0
Ф5-2	2400	2400	400	3200	4,48	B30	1,79	351,0
Ф5-4	2400	2400	400	3200	4,48	B30	1,79	375,0
Ф6-4	2700	2700	400	3200	5,60	B30	2,24	412,0

Foundations under the anchor-angular unified metal poles with upgraded headwall for the power lines with the voltage 35-330 kV

album series 3.407-115 ed. 2

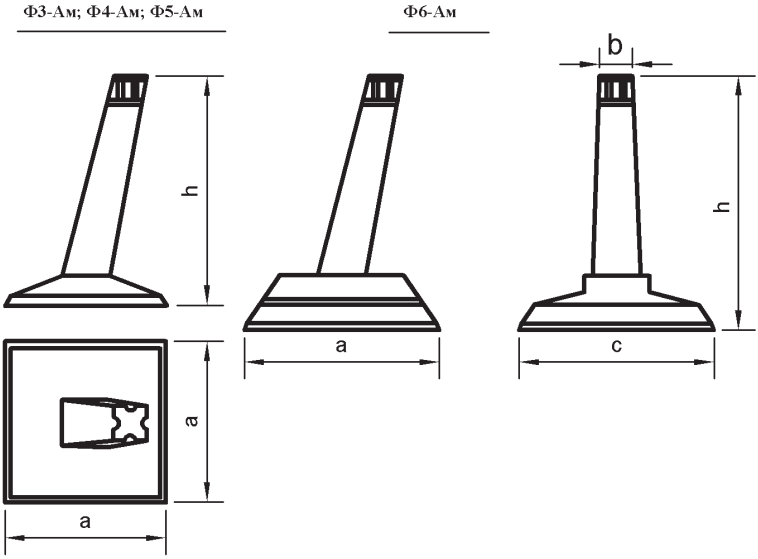

Product name (F)	Sizes, mm				Product weight, t	Grade of concrete	Consumption of materials	
	a	c	b	h			Concrete, m^3	Steel, kg
Ф3-Ам	2100	2100	400	3115	4,30	B30	1,70	385,0
Ф4-Ам	2400	2400	400	3115	5,00	B30	2,00	469,0
Ф5-Ам	2700	2700	400	3115	6,25	B30	2,50	587,0
Ф6-Ам	3000	2020	400	3115	6,90	B30	2,70	792,0

Foundations under the anchor-angular unified metal poles for the power lines with the voltage 35-330 kV

album series 3.407-115 ed. 2

album series 3.407.1-157

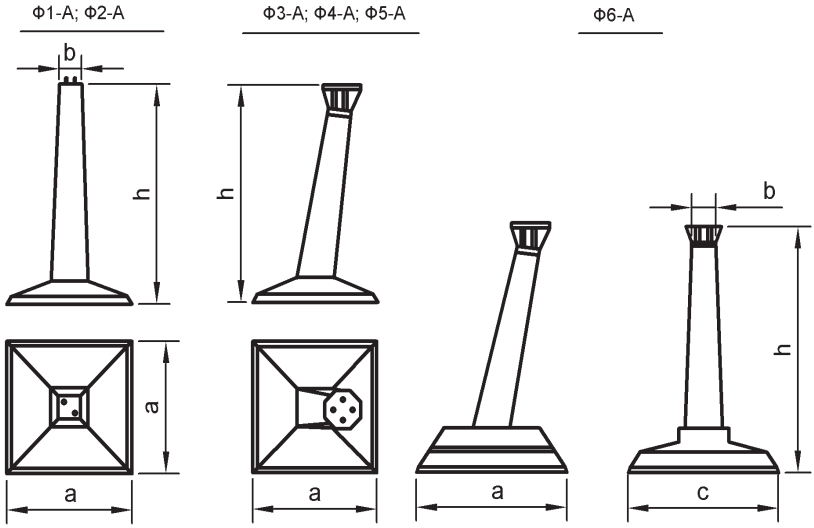

Product name (F)	Sizes, mm				Product weight, t	Grade of concrete	Consumption of materials	
	a	c	b	h			Concrete, m³	Steel, kg
Ф1-А	1500	1500	400	3200	2,50	B30	1,00	293,0
Ф15.15	1500	1500	400	3200	2,50	B30	1,00	279,0
Ф2-А	1800	1800	400	3200	3,00	B30	1,20	319,0
Ф18.18	1800	1800	400	3200	3,00	B30	1,20	297,0
Ф3-А (Д-7 М42)	2100	2100	400	3115	4,30	B30	1,70	445,0
Ф3-А (Д-8 М56)	2100	2100	400	3115	4,30	B30	1,70	566,0
Ф4-А (Д-7 М42)	2400	2400	400	3115	5,00	B30	2,00	533,0
Ф4-А (Д-7 М48)	2400	2400	400	3115	5,00	B30	2,00	540,0
Ф4-А (Д-8 М56)	2400	2400	400	3115	5,00	B30	2,00	654,0
Ф5-А (Д-7 М42)	2700	2700	400	3115	6,25	B30	2,50	643,0
Ф5-А (Д-7 М48)	2700	2700	400	3115	6,25	B30	2,50	650,0
Ф5-А (Д-8 М56)	2700	2700	400	3115	6,25	B30	2,50	764,0
Ф6-А (Д-7 М42)	3000	2020	400	3115	6,90	B30	2,70	855,0
Ф6-А (Д-7 М48)	3000	2020	400	3115	6,90	B30	2,70	862,0
Ф6-А (Д-8 М56)	3000	2020	400	3115	6,90	B30	2,70	976,0

Assembly foundations under anchor-angular unified metal poles for the power lines with the voltage 35-330 kV

album series 3.407-115 ed. 2

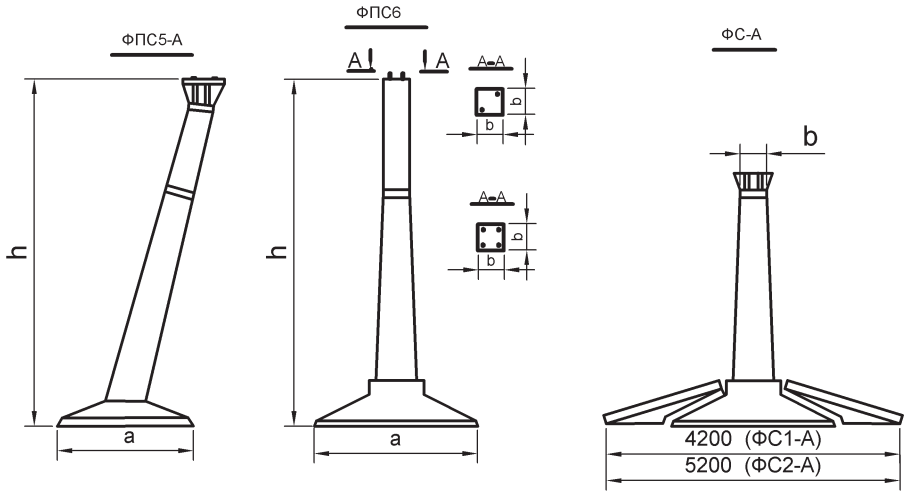

Product name (FPS, FS)	Sizes, mm				Product weight, t	Grade of concrete	Consumption of materials	
	a	a	b	h			Concrete, m³	Steel, kg
ФПС5-А (Д7 М42)	2700	2700	400	5160	7,50	В30	3,00	821,0
ФПС5-А (Д7 М48)	2700	2700	400	5160	7,50	В30	3,00	828,0
ФПС5-А (Д8 М56)	2700	2700	400	5160	7,50	В30	3,00	942,0
ФПС6-4	2700	2700	400	5000	6,30	В30	2,51	615,0
ФС1-А (Д7 М42)	3000	4200	400	3400	10,60	В30	4,22	1289,0
ФС1-Ам (Д35)	3000	4200	400	3400	10,60	В30	4,22	1225,0
ФС1-А (Д7 М48)	3000	4200	400	3400	10,60	В30	4,22	1296,0
ФС1-А (Д8 М56)	3000	4200	400	3400	10,60	В30	4,22	2048,0
ФС2-А (Д7 М42)	3000	5200	400	3400	11,60	В30	4,64	1369,0
ФС2-Ам (Д35)	3000	5200	400	3400	11,60	В30	4,64	1305,0
ФС2-А (Д7 М48)	3000	5200	400	3400	11,60	В30	4,64	1376,0
ФС2-А (Д8 М56)	3000	5200	400	3400	11,60	В30	4,64	1490,0

Foundations under anchor-angular unified metal poles for the power lines with the voltage 750 kV

drawing 9797tm-t1

НФ2-1

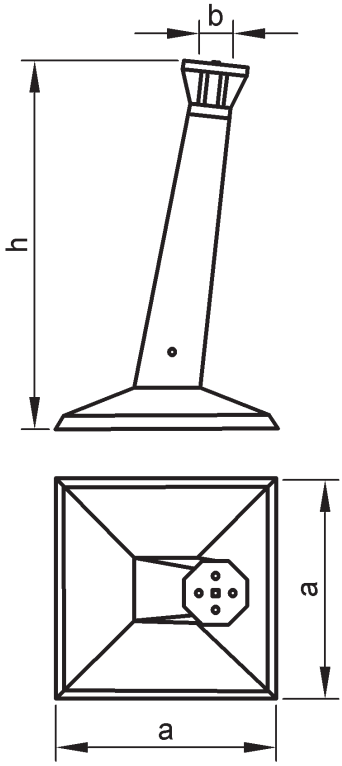

НФ2-1i

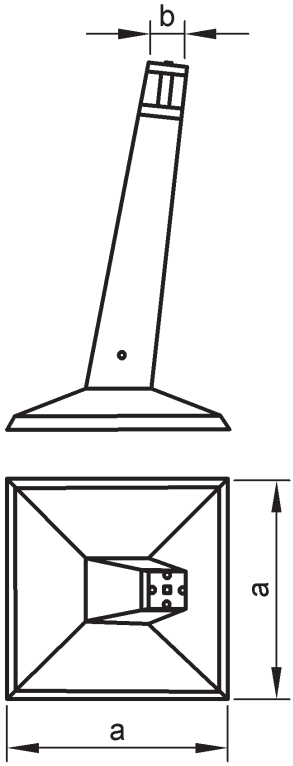

Product name (NF)	Sizes, mm				Product weight, t	Grade of concrete	Consumption of materials	
	a	c	b	h			Concrete, m³	Steel, kg
НФ2-1	2700	2700	460	3850	7,80	B25	2,97	960,35
НФ2-1i	2700	2700	460	3850	8,23	B25	3,29	896,61

Foundations for installation under radio-transmitting masts

drawing 01-03/08-CB.0

drawing 01-03/10-CB.6

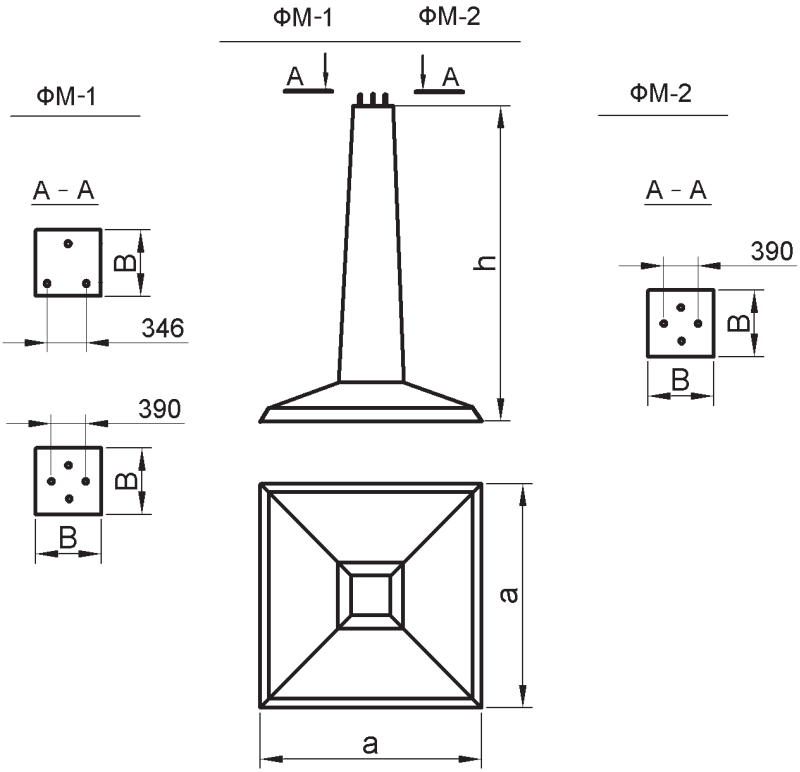

Product name (FM)	Sizes, mm				Product weight, t	Grade of concrete	Consumption of materials	
	a	c	B	h			Concrete, m³	Steel, kg
ФМ-1	2700	2700	570	3800	7,23	B30	2,89	728,0
ФМ-2	2700	2700	570	3800	7,23	B30	2,89	881,9

Foundation crossbars

album series 3.407-115 ed.5

album series № 1623tm-t5

P1

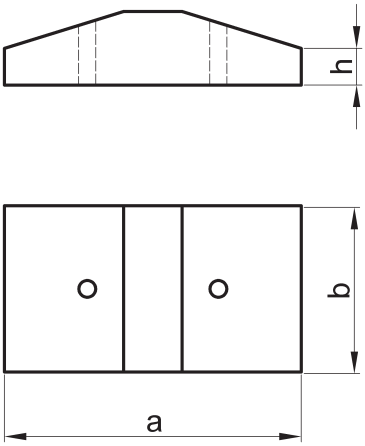

P1-A; AP5 - AP8; ПБ-1

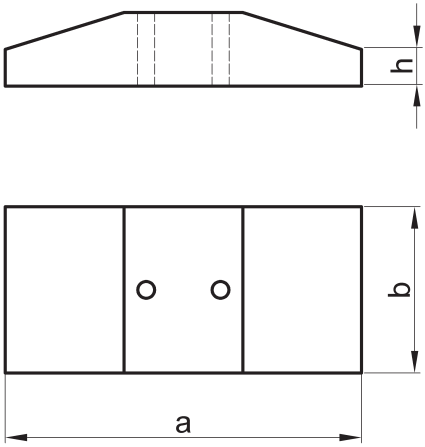

Product name (R, AR)	Sizes, mm			Product weight, t	Grade of concrete	Consumption of materials	
	a	b	h			Concrete, m³	Steel, kg
P1	1500	500	140	0,20	B25	0,08	14,0
P1-A	3000	400	200	0,50	B25	0,20	38,0
AP5	3000	400	200	0,50	B25	0,20	62,0
AP6	3500	500	200	0,76	B25	0,28	96,0
AP 6-1	3500	500	200	0,80	B25	0,28	96,0
AP-8	6000	640	350	2,60	B25	1,04	198,0
Loading beam ПБ-1	6000	640	350	2,63	B25	1,04	165,0

Anchor slabs

album series 3.407-115 ed.5

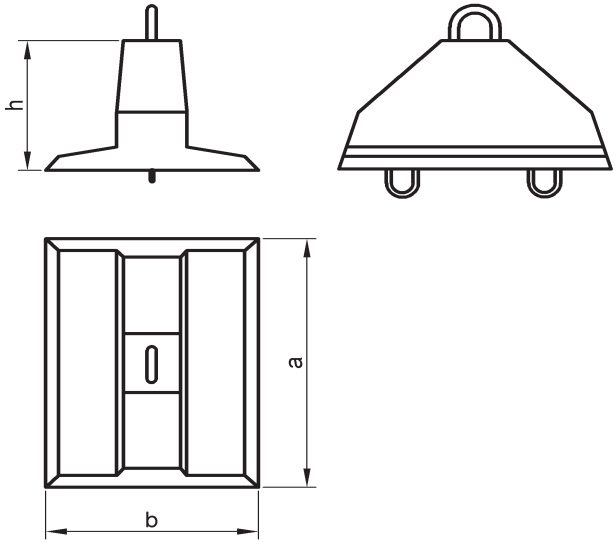

Product name (PA)	Sizes, mm			Product weight, t	Grade of concrete	Consumption of materials	
	a	b	h			Concrete, m³	Steel, kg
ПА1-1	1000	1000	450	0,50	B25	0,20	25,0
ПА1-2	1500	1000	450	0,70	B25	0,28	30,0
ПА2-1	2000	1500	600	1,63	B25	0,65	63,0
ПА2-2	3000	1500	600	2,23	B25	0,89	92,0

ПРГ-1м slabs
УП-1 slabs

drawing № 9797tm-t1

album series 3.407-102 ed. 1

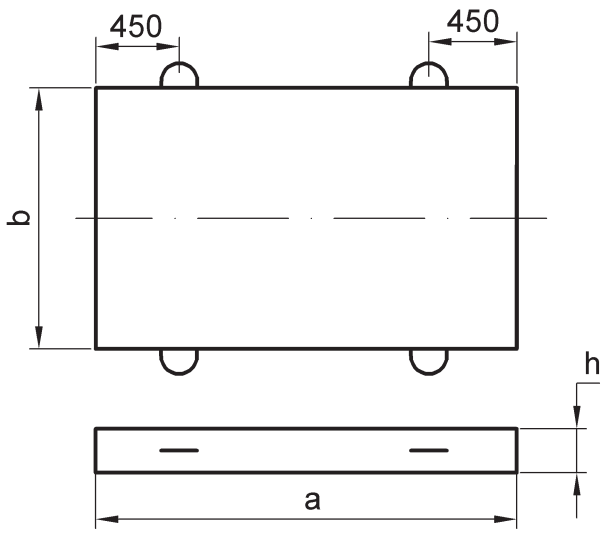

Product name (PRG, UP)	Sizes, mm			Product weight, t	Grade of concrete	Consumption of materials	
	a	b	h			Concrete, m³	Steel, kg
ПРГ-1м	2900	1750	200	2,55	B25	1,02	198,00
УП-1	900	900	120	0,25	B25	0,10	13,70

Slabs for laying the tracks and installation of transformers

album series 3.407-102 ed. 1

НСП-1

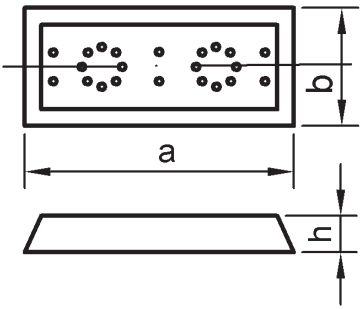

НСП-3

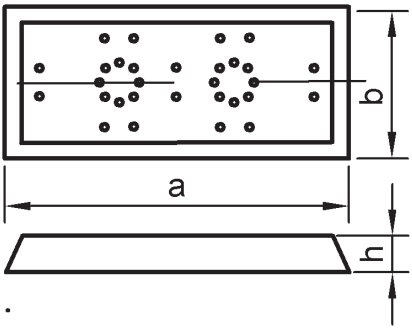

Product name (NSP)	Sizes, mm			Product weight, t	Grade of concrete	Consumption of materials	
	a	b	h			Concrete, m^3	Steel, kg
НСП -1	3500	1000	250	2,19	B25	0,88	290,2
НСП -3	3500	1500	250	3,28	B25	1,31	455,8

Slabs for laying the tracks and installation of transformers

drawing 6АЩ 309. 107 СВ

НСП-12а

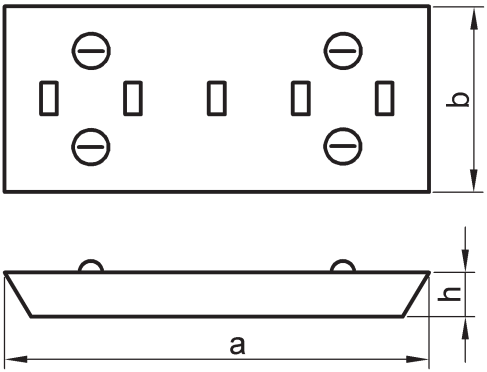

Product name (NSP)	Sizes, mm			Product weight, t	Grade of concrete	Consumption of materials	
	a	b	h			Concrete, m^3	Steel, kg
НСП -12а	3500	1000	250	2,04	B25	0,82	109,6

Foundations for installation of equipment transformer substations

album series 3.407.1-157

ЛЖ

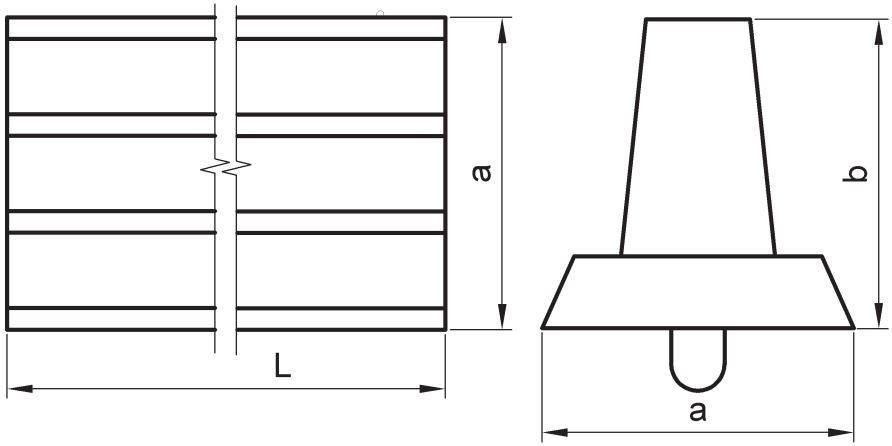

Product name (LG)	Sizes, mm			Product weight, t	Grade of concrete	Consumption of materials	
	L	a	b			Concrete, m^3	Steel, kg
ЛЖ-16	1600	400	500	0,430	B25	0,17	44,10
ЛЖ-28	2800	400	500	0,750	B25	0,30	72,50
ЛЖ-44	4400	400	500	1,200	B25	0,48	111,10
ЛЖ-60	6000	400	500	1,630	B25	0,65	169,20
ЛЖ-84	8400	400	500	2,280	B25	0,91	234,80
ЛЖ-104	10400	400	500	2,830	B25	1,13	290,30

Universal standpipes and piles under equipment

album series 3.407-102 ed.1

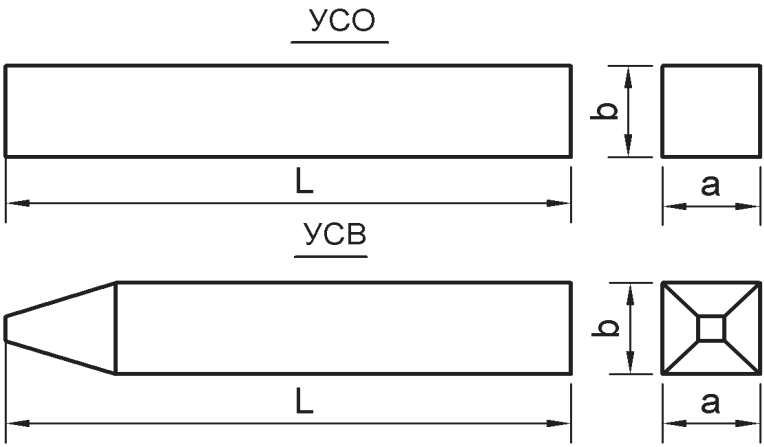

Product name (USO, USV)	Sizes, mm			Product weight, t	Grade of concrete	Consumption of materials	
	L	a	b			Concrete, m³	Steel, kg
Стояк УСО-1А	5200	250	250	0,800	B25	0,32	64,10
Стояк УСО-2А	4400	250	250	0,700	B25	0,27	46,70
Стояк УСО-3А	3600	250	250	0,600	B25	0,22	39,90
Стояк УСО-4А	3000	250	250	0,500	B25	0,19	34,90
Стояк УСО-5А	2200	250	250	0,400	B25	0,14	27,10
Стояк УСО-5А-I	2200	250	250	0,400	B25	0,14	31,40
Паля УСВ-3А	5500	250	250	0,830	B25	0,33	64,60
Паля УСВ-4А	4500	250	250	0,680	B25	0,27	55,10
Паля УСВ-5А	6500	250	250	1,000	B25	0,40	85,50

Norms of loading by railway

Poles

№	Name	Norm of loading, pcs	Type of rolling stock
Poles of the same type			
1	СК 22	8	twin platforms
		10	twin platforms
		12	twin platforms
		14	twin platforms
		16	twin platforms
		18	twin platforms
2	СК 26	8	twin platforms
		10	twin platforms
		12	twin platforms
		14	twin platforms
		16	twin platforms
3	СЦ 20	5	twin platforms
		6	twin platforms
		7	twin platforms
		8	twin platforms
		9	twin platforms
Poles are combined			
4	СК 26 СК 22	10 6	twin platforms
5	СК 26 СК 22	4 12	twin platforms
6	СК 26 СК 22	12 4	twin platforms
7	СК 26 СК 22	14 2	twin platforms
8	СК 26 СК 22	2 14	twin platforms
9	СК 26 СК 22	2 10	twin platforms

Norms of loading by railway

Reinforced concrete products

№	Name	Norm of loading, pcs	Type of rolling stock
10	СК 26 СК 22	2 16	twin platforms
11	СК 26 СК 22	6 10	twin platforms
12	СК 26 СК 22	8 8	twin platforms
Reinforced concrete products			
13	НФ2-1	4	semi carriage
14	Ф6-А; Р1-А; ПН2-А	4; 8; 8	semi carriage
15	Ф6-Ам; Р1-А; ПН1-А	4; 8; 8	semi carriage
16	Ф6-Ам; Р1-А; ПН2-А	4; 8; 8	semi carriage
17	ФПС5-А	4	semi carriage
18	Ф3-А	9	semi carriage
19	Ф3-А	8	semi carriage
20	Ф3-Ам	9	semi carriage
21	Ф3-Ам	8	semi carriage
22	Ф5-Ам; Ф3-Ам; АР 6; АР 5	2; 3; 29; 14	semi carriage
23	Ф5-Ам	4	semi carriage
24	Ф5-Ам	6	semi carriage
25	АР 6	90	semi carriage
26	АР 5	124 - 126	semi carriage
27	Р1-А	124 - 126	semi carriage
28	ПБ-1	24	semi carriage
29	УБК-9А	48	semi carriage
30	УБК-1А	110	semi carriage
31	НСП - 3	18	semi carriage
32	СВ105-5	55	semi carriage
33	СВ95-2	90	semi carriage
34	УСВ-5А	55	semi carriage
35	С30.6	32	semi carriage
36	С35.8	21	semi carriage

Us easy to find

- Shevchenko Str., Duliby on the highway Stryi - Skole, turn to the street Zavodska

OR

- Arrival from a street Detour road Stryi

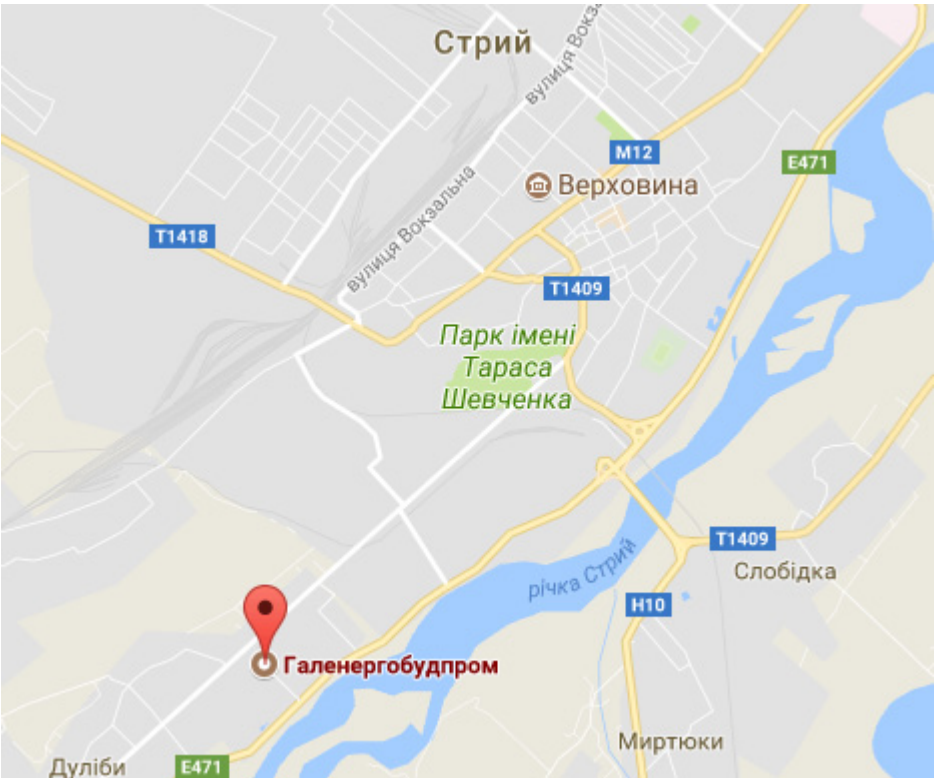

We are glad to see you

Certificates

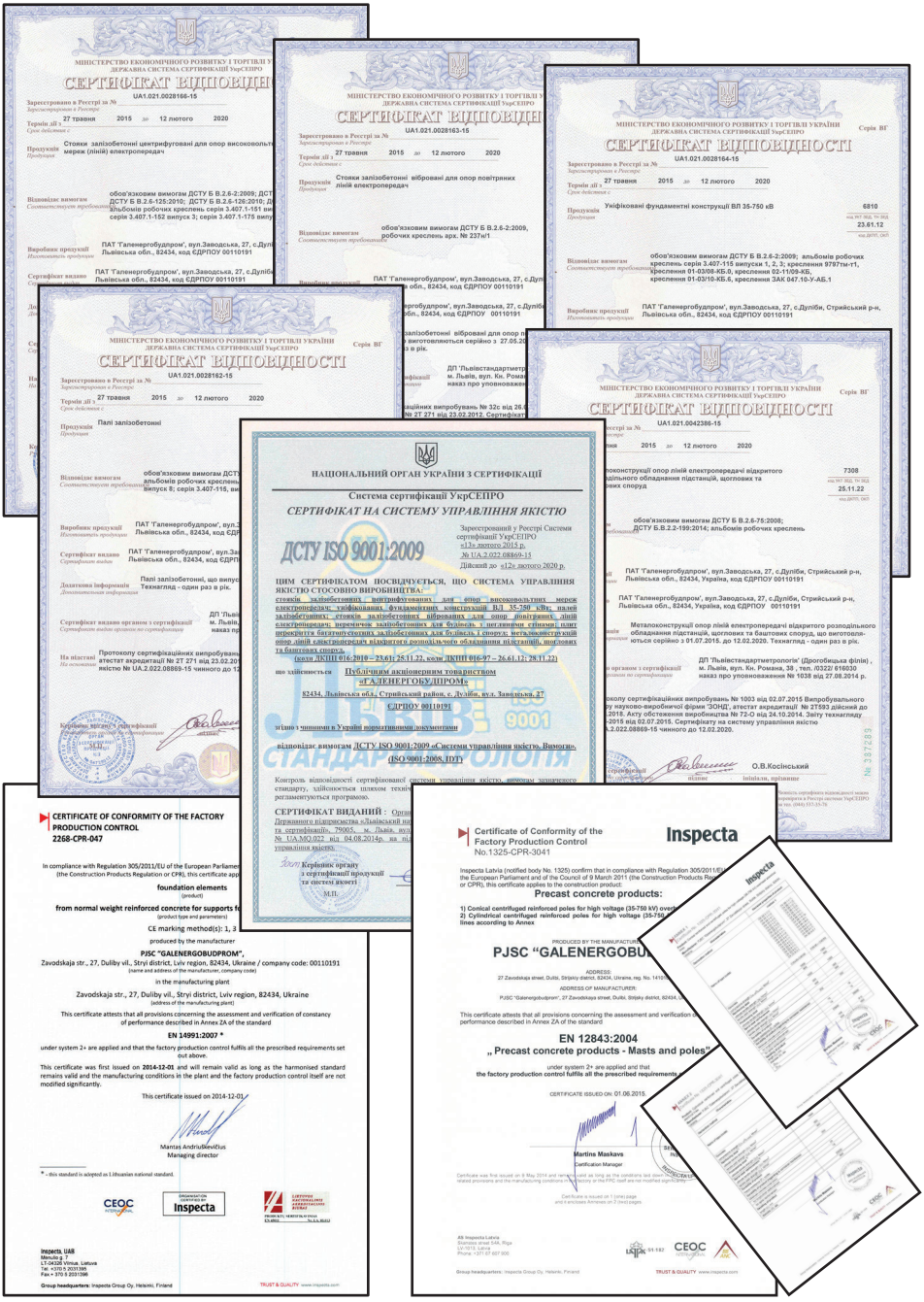

galenergo@ukr.net

+380324536447
+380324536449

27 Zavodska Str., Duliby, Stryi District, Lviv Region
www.gebp.lviv.ua